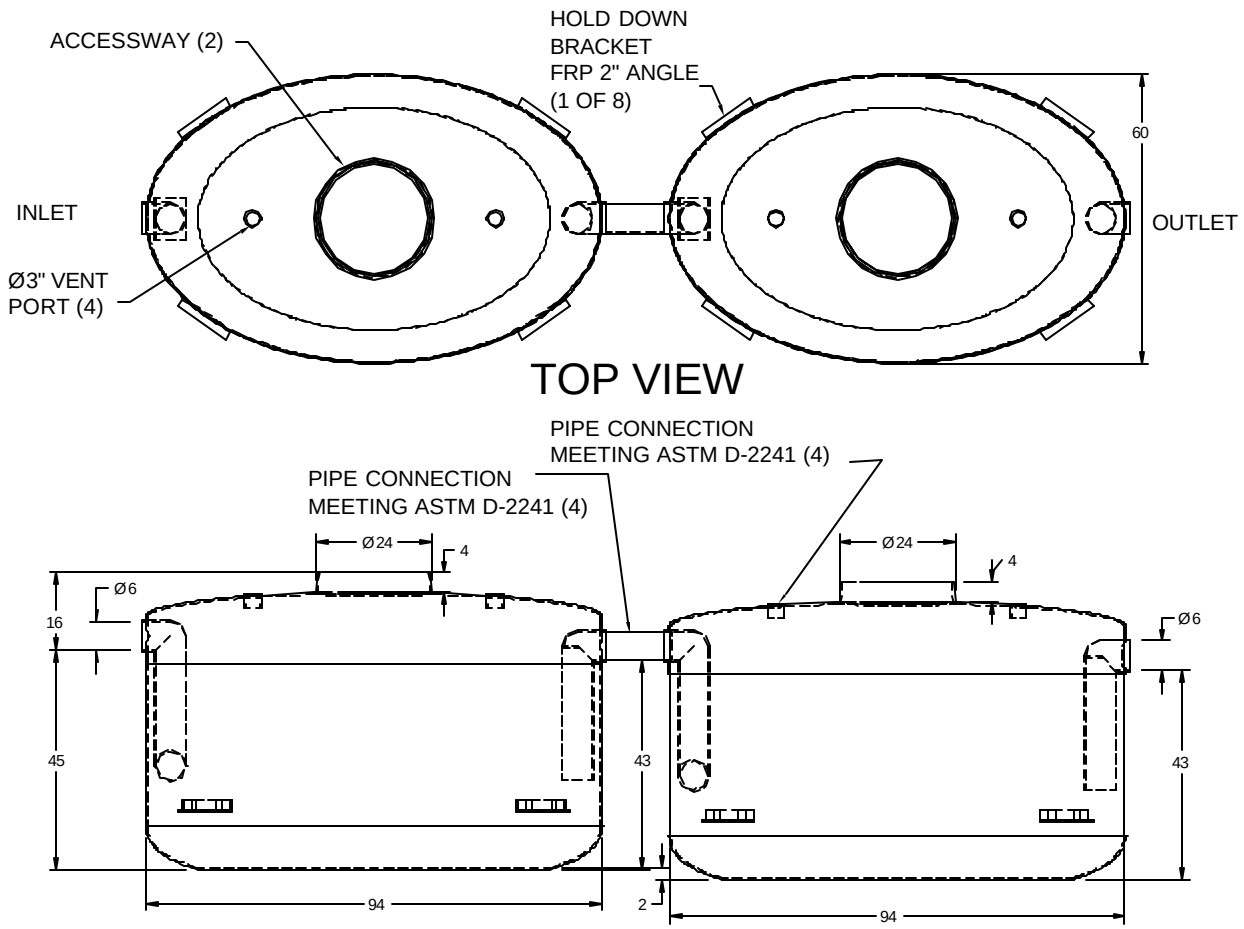

NOTES:

1. FOR GRAVITY APPLICATIONS ONLY.
2. ALL UNITS SHALL BE MANUFACTURED WITH FIBERGLASS REINFORCED PLASTICS. PHYSICAL CHARACTERISTICS AND THICKNESS:
ISOTHALIC POLYESTER RESIN AND E GLASS ASTM D 883-ULC THIRD PARTY TESTED.
MINIMUM THICKNESS 1/4" WALL AND 3/8" TOP AND BOTTOM BOWLS.
MINIMUM ULTIMATE TENSILE STRENGTH , 12,000PSI
MINIMUM FLEXURAL STRENGTH, 19,000PSI
MINIMUM FLEXURAL MODULUS, 800,000PSI
MINIMUM BURIAL DEPTH = 18" FOR NON TRAFFIC RATED AND
MINIMUM BURIAL DEPTH = 30" FOR TRAFFIC RATED (GRADE TO INVERT OF INLET)
MAXIMUM BURIAL DEPTH = 6 FEET (FOR DEEPER INSTALLATIONS CUSTOM REINFORCEMENT MAY BE REQUIRED)
3. ALL UNITS ARE TO BE INSTALLED IN ACCORDANCE WITH THE MANUFACTURERS INSTALLATION INSTRUCTION.
4. SEE MANUFACTURER'S INSTALLATION INSTRUCTION FOR H20 TRAFFIC LOADING.
5. ALL INTERNAL PIPING IS SDR 35 PVC SEWER MATERIAL WITH EXTERNAL SDR 26 ADAPTORS.
6. ALL UNITS COME STANDARD WITH 6" INLET AND OUTLET (OTHER CUSTOM SIZES AVAILABLE).
7. EXTENSION COLLAR TO BE ORDERED TO FINISHED GRADE, CUT ON SITE FOR FINAL ADJUSTMENT AND CAULKED WITH SIKAFLEX BY CONTRACTOR.
8. COVERS AVAILABLE FOR H20 TRAFFIC LOADING, PEDESTRIAN LOADING OR ABOVE GROUND INSTALLATION.
9. 30 YEAR WARRANTY AGAINST LEAKS, AND STRUCTURAL FAILURE.

GMC 1500(2)	FM	GALLON INTERCEPTOR
6"		INLET & OUTLET
24"		MANWAY
ALL DIMENSIONS IN INCHES		

TOTAL WET VOLUME:	1500 GAL
MAX. GREASE CAPACITY:	708 GAL
MAX SOLIDS CAPACITY:	644 GAL
PEAK FLOW RATES	
PDI PERFORMANCE:	500 GPM
(CAUTION PDI MAY NOT MEET FOG DISCHARGE LIMIT OF 100 MG/L AND 300 MG/L OF SOLIDS ENFORCED BY LOCAL SEWER AUTHORITIES)	
LESS THAN 100 MG/L FOR FREE FAT, OIL, GREASE:	300 GPM
*CONSULT LOCAL AUTHORITIES FOR MINIMUM SIZE OF SEPARATORS	

YORKVILLE–BRISTOL
SANITARY DISTRICT

EXTERNAL GREASE TRAP
1500 GALLONS

DESIGNED JWF	APPROVED PFM	SCALE NTS
DRAWN	DATE 10/9/06	STD–011